Neptune

Drawings and Measurements

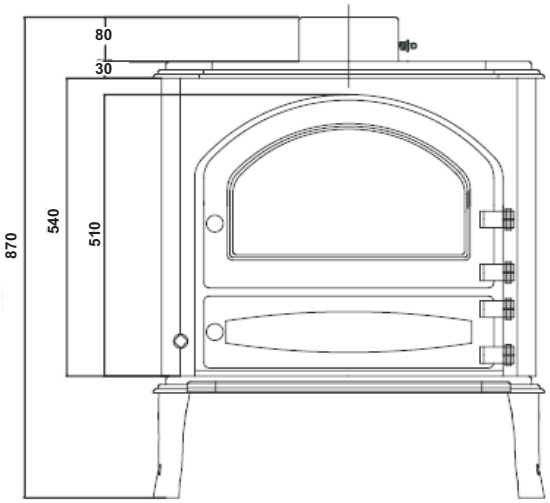

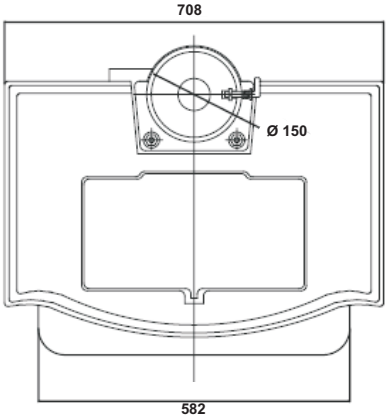

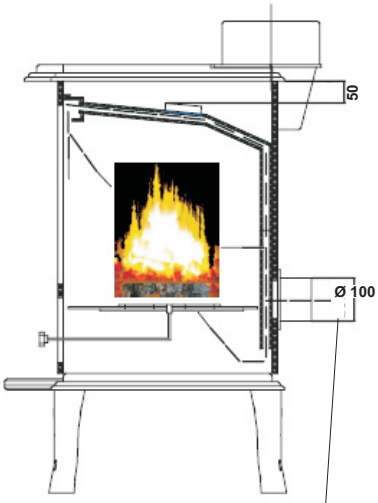

External air flow

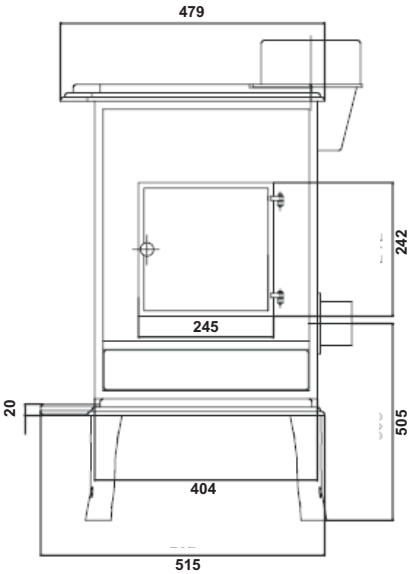

Extra Details / Technical Information

Measurements in mm HxWxD	Fire place mm HxWxD	Fire opening in mm HxW	Stove Window HxW	Design	Fleuheight pipe	Capacity cbm	Tested according:	Ber.13% O2 Dust in mg	Ber.13% O2 Co-Certificate emission
790x708x479	320x630x280	330x500	245x440	A1	790	180	13240	31	1125

Colour	Inside of fire	Fuel	Continuing time burning	Fire rotation grip	Ash pan	External air flow	O-Norm	Primary and Secundary air	Prim./Sec. aircontroller	According to BimschV. 1 + 2	Clean air Switzerland
Black	Cast Iron	Wood/coal	Time burning	yes	yes	yes	yes	yes	yes	yes	yes